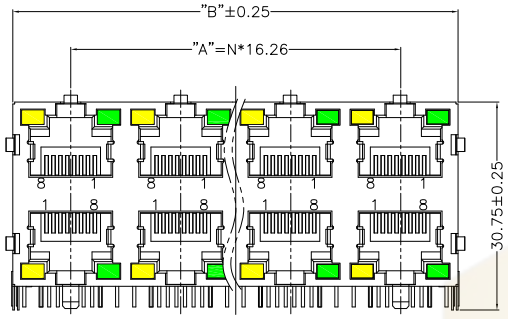

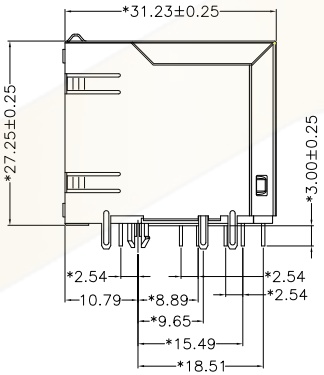

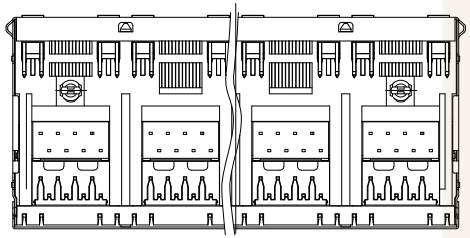

MATERIAL:
HOUSING:PA46,PBT,PA66,BLACK.
TERMINAL: PHOSPHOR BRONZE Ø0.46MM
G/FU"GOLD PLATING

SHIELD:C2680,T=0.20MM, 20 MIN NICKEL 'PLATING
NO ALL AREA

MACHANICAL:
DURABILITY: 750 CYCLES MIN,12.5MM/MINUTE.
INSERTION FORCE: 2.2KG.F MAX.
RETENTION STRENGTH : 7.7KG.F BETWEEN JACK AND PLUG.
OPERATING TEMPERATURE: -40 ℃~+85℃.
STORAGE TEMPERATURE: -40°C~+85°C.
ALL CRITICAL DIMENSIONS WITH "*"

VOLTAGE: 125 VOLTS AC.
CURRENT RATING : 1.5AMP.
DIELECTRIC STRENGTH: 1000 VAC RMS 50HZ OR 60HZ,1MIN.
INSULATION RESISTANCE: 500 MEGA OHMS MIN. INITIAL
AFTER 500V DC FOR 1 MINUTE.
CONTACT RESISTANCE: SINGLE TERMINAL 30 MILLIOHMS MAX.
INITIAL 50 MILLIOHMS MAX. AFTER
DURABILITY TEST.

LED Specification

Standard LED Color	LED Wavelength	Foward(A)	Foward(V)
Yellow	568nm	20mA	1.85-2.45V
Green	585nm	20mA	1.7-2.2V

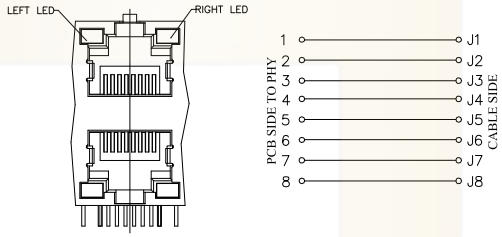

LED LAYOUT

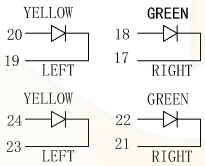

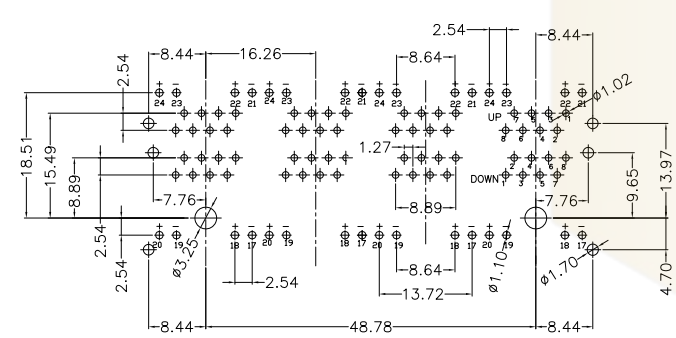

PC Board Layout example

PORTS	N	A±0.25	B±0.25	C±0.05
2x8	7	113.82	130.95	113.82
2x6	5	81.30	98.43	81.30
2x4	3	48.78	65.91	48.78
2x3	2	32.52	49.45	32.52
2x2	1	16.26	33.39	16.26

序号 No.	变更内容 MODIFY CONTENT	日 期 MODIFY DATE
1	初版发行	

GENERL TOLERANCE

DIM	TOL
X.X	±0.30
X.XX	±0.20
X.XXX	±0.10
Angle	±3.0°

制 图 DRAWING	
审 核 CHECK	
批 准 APPROVAL	
比 例 SCALE	
投 影 Projection	

深圳市华灿天禄电子有限公司
ShenzhenhuacantianluELECTRONICS CO.,LTD

产品名称 TITLE	网络插座	版 本 REV.	A
产品料号 PART NO.	HC-RJ45-059C-2*4-1	单 位 UNITS	mm
材 料 MATERIAL		页 次 SHEET	1/1

深圳市华灿天禄电子有限公司 工程专用章