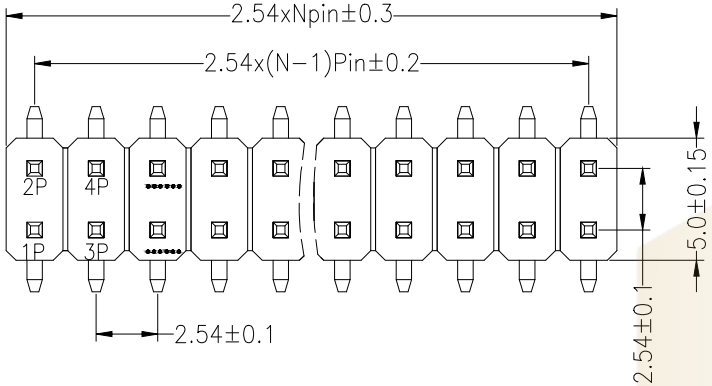

Recommended P.C.B Layout(Top Side)
(PCB BOARD TOLERANCE± 0.05)

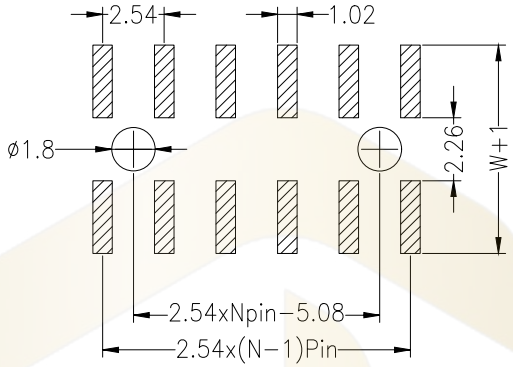

SPECIFICATIONS
Rated Current:3.0AMP
Contact Resistance:20mΩ Max
Withstand Voltage:1000V AC/DC
Insulation Resistance:1000MΩ Min
Operation Temperature:-40°c to +105°c

Contact Material:Brass
Contact Plating:Au or Sn Over Ni
Insulator Material:Polyester(UL94V-0)
Standard: PA6T
Max.Processing Temp: 230°C for 30-60 seconds
(260°C for 5 seconds)

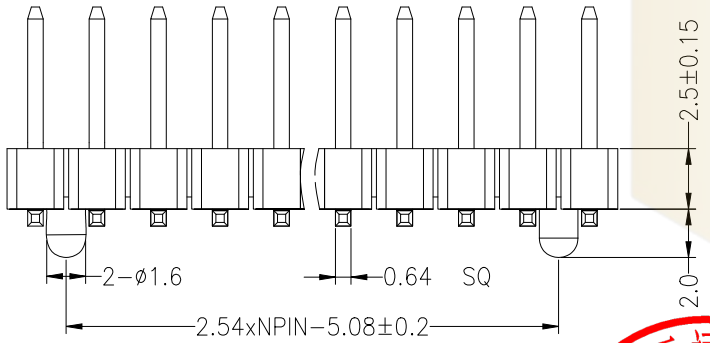

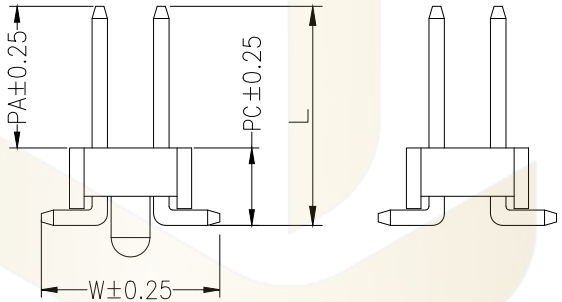

P = With Post　　默认 = W/O Post

Dimension antitheses list				
ITEM	PA	PC	W	L
Standard	6.00	3.20	7.50	9.20
Alternate				

Ordering Information

PZ 254 - * - N - S - * - ** - P

- No.of Rows: 1=Single Row, 2=Dual Row
- No.of Pins: 2-40Pin
- Type: Z=直针, W=弯针, S=立贴, WS=侧贴
- Length: (产品整高)
- Contact Plating: G0:Gold Flash, G1:1u" Gold, G2:3u" Gold, G3:5u" Gold, G4:10u" Gold, G5:15u" Gold, G6:30u" Gold, S0:Gold Flash/Tin, S1:Tin
- Post: (带柱)

工程专用章

序号 No.	变更内容 MODIFY CONTENT	日期 MODIFY DATE
1	初版发行	

GENERL TOLERANCE	
DIM	TOL
X.X	±0.30
X.XX	±0.20
X.XXX	±0.10
Angle	±3.0°

制图 DRAWING	
审核 CHECK	
批准 APPROVAL	
比例 SCALE	
投影 Projection	

深圳市华灿天禄电子有限公司
ShenzhenhuacantianluELECTRONICS CO.,LTD

产品名称 TITLE	2.54双排 排针 贴片(塑高2.5)	版本 REV.	A
产品料号 PART NO.	PZ254-2-N-S-2.5-XX(L9.2)	单位 UNITS	mm
材料 MATERIAL		页次 SHEET	1/1